FIRST PRODUCTION SAMPLE MUST BE SUBMITTED TO McCANN'S ENGINEERING & MFG. CO. FOR APPROVAL.

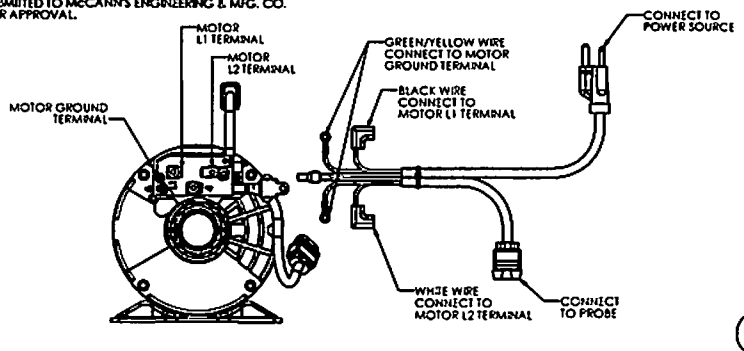

MOTOR WIRE CONNECTIONS

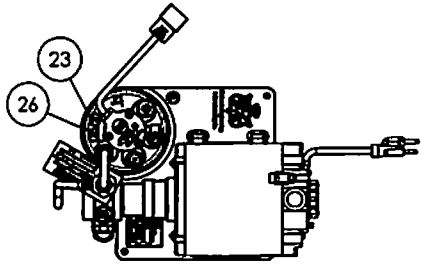

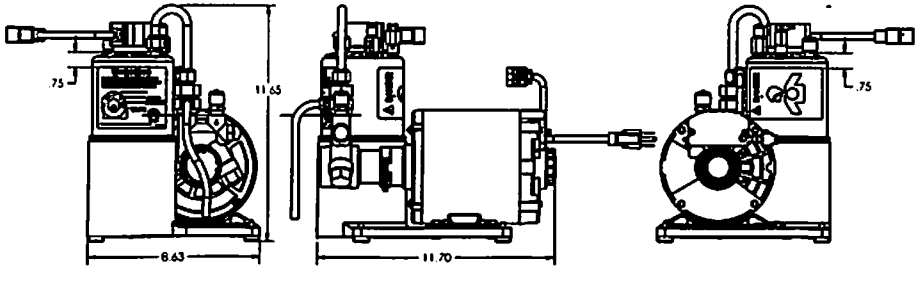

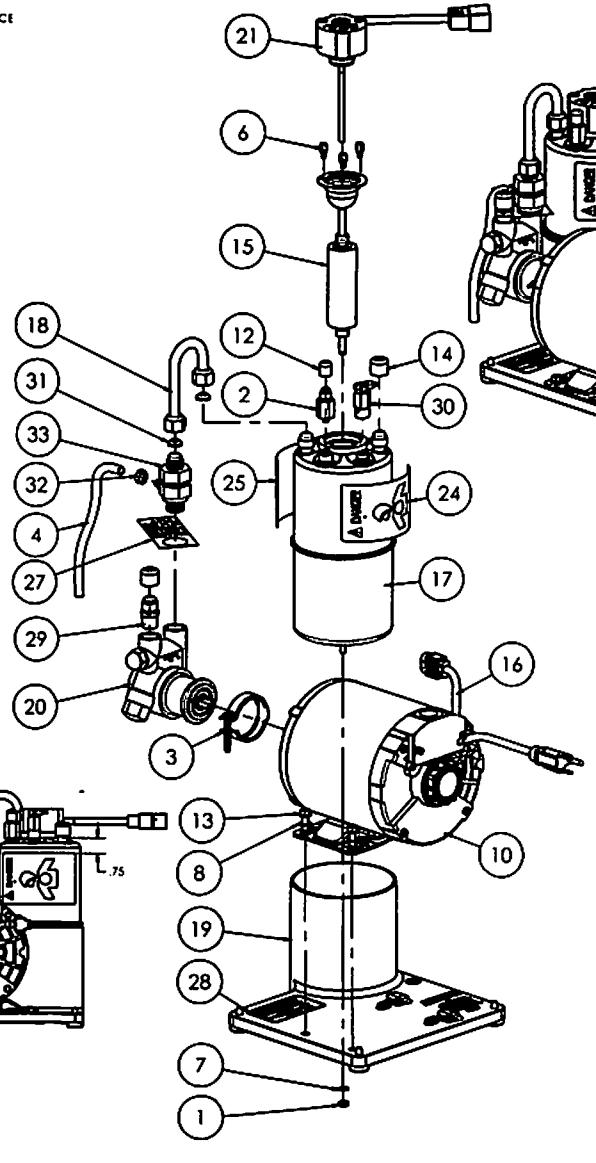

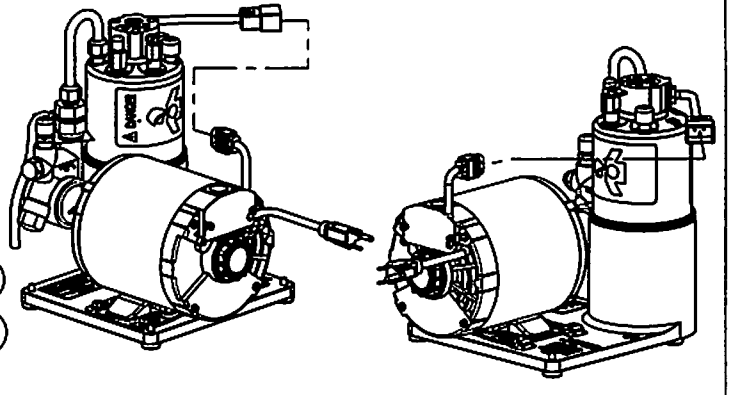

REVISIONS					
REV	ECN#	DESCRIPTION	DRFT.	APPR.	DATE
A	9733	PRODUCTION RELEASE.	ECP		06/14/06
B	9782	ADDED ITEM 10-0251 TO PARTS LIST, & 2X 10-0297 WAS 3X 10-0257.	ECP		09/17/07

43-6002

ITEM NO	QTY	PART NO	DESCRIPTION
33	1	19-0897	ASSE 1022, BACKFLOW PREVENTER
32	1	19-0676	CLAMP, 13/32 I.D., OETIKER, STEPLESS, NO. 10 5-5056
31	2	19-0268	GASKET, FLARE, 3/8, SAE
30	1	19-0031	VALVE ASSY, PRESSURE RELIEF, CARB. TANK, 180 PSI, RED HANDLE
29	1	19-0028	FITTING, 3/8 MALE FLARE X 3/8 MALE PIPE THREAD, BRASS
28	1	18-1630	LABEL, MODEL/SERIAL NUMBER, CARBONATOR, 43-6002
27	1	18-1571	TAG, ABF-1
26	1	18-1368	DECAL, TEST STICKER
25	1	18-1345	DECAL, SMALL CARBONATOR
24	1	18-1339	DECAL, CARBONATOR TANK, CO2
23	1	18-1075	DECAL, INSPECTION STICKER (11 THRU 25)
22	1	17-0500	INSTRUCTION, INSTALLATION, CARBONATOR & PROBE (NOT SHOWN)
21	1	16-2115-41	ASSY, PROBE, 115V ELECTRICAL, BLACK CAP
20	1	16-0148	PUMP, BRASS, ROTARY VANE, 100 GPH
19	1	15-3153	ASSY., CARBONATOR BASE W/ INSERT & FEET
18	1	15-3093	ASSY., TUBING, WATER INLET FOR 43-5002
17	1	15-3092	ASSY., CARB., WELD, TOP & BOTTOM, SMALL TANK, 3/8 MF W/ STUD
16	1	15-2088	ASSY., CARB., POWER CORDS, 18-3/8 FT
15	1	15-1951	ASSY., 115/220V, PROBE, FLOAT RING
14	2	10-2006	CAP PLUG, VC-600-B, BLACK, VINYL
13	2	10-1938	1/4-20 X 5/8, SCREW, HEX HEAD, PHILLIPS
12	1	10-1877	PLUG, CAP, VC-375-B, BLACK
11	A/R	10-1651	ADHESIVE, LOCTITE, 565 (NOT SHOWN)
10	1	10-1649	MOTOR, 115V, 1/3 HP
9	1	10-1181	WIRE TIE, TWISTER, 5" LONG
8	2	10-0297	WASHER, LOCK, # 1/4, EXTERNAL TOOTH, ZINC PLATED
7	1	10-0251	WASHER, LOCK, #10, EXT TOOTH
6	3	09-1877	STUD, PROBE
5	1	07-0344	CARTON, CARBONATOR, SMALL (NOT SHOWN)
4	1	01-1649	HOSE, PVC, 1/4 I.D. X 3/8 O.D., CUT 12"
3	1	00-1272	CLAMP, V-BAND, CARBONATOR
2	1	00-0868	CHECK VALVE, CARBONATOR, SINGLE, 1/4 MALE FLARE
1	1	00-0424	NUT, HEX, 10-32, ZINC PLATED

LIST OF MATERIALS

SEE PARTS LIST

ECP 05/01/06

McCann's Engineering & Mfg Co
4570 W Colorado Blvd
Los Angeles CA 90039

ASSY., CARBONATOR, SMALL 115V, ASSE 1022

D 43-6002 B

SCALE NTS SHEET 1 OF 1

1. IDENTIFY SHIPPING CONTAINER WITH PART NO., & LATEST REV. LETTER.
NOTES: UNLESS OTHERWISE SPECIFIED.